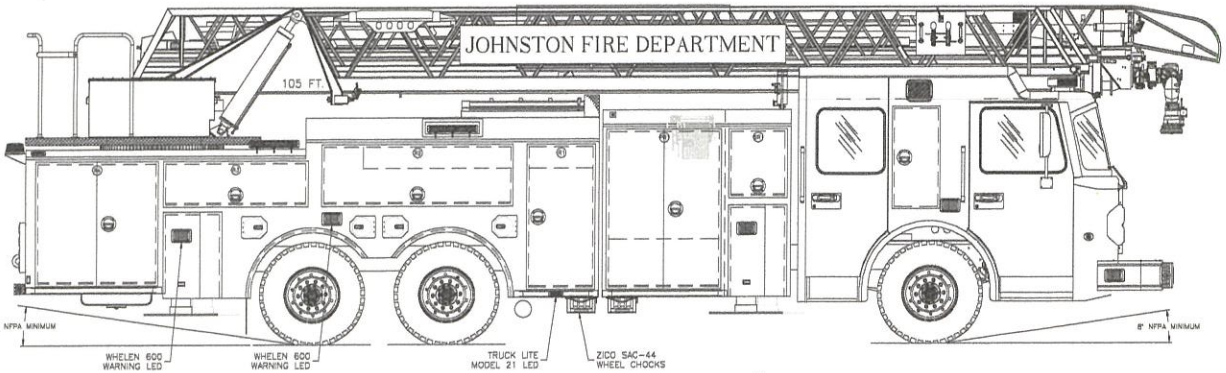


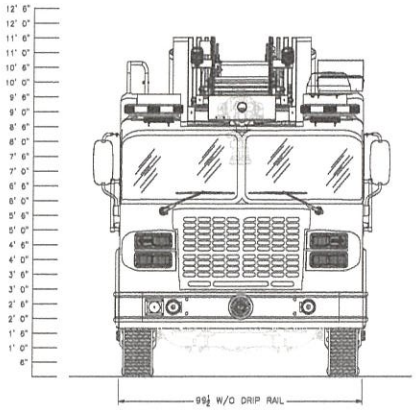


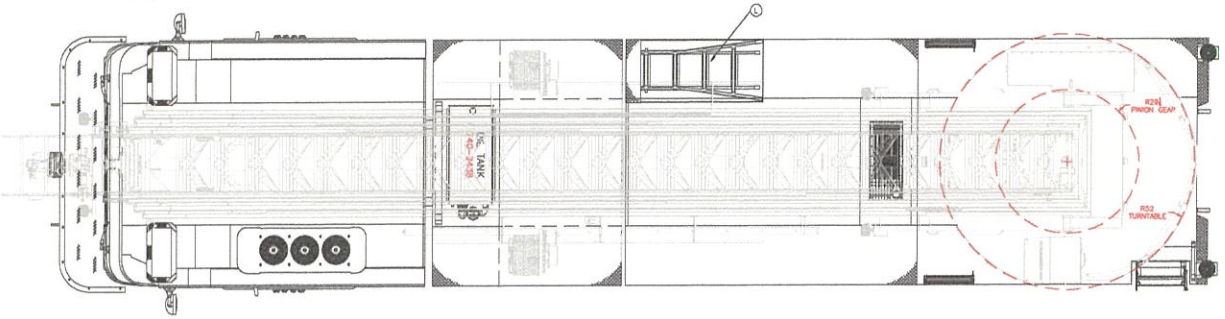


| COMPARTMENT DIMENSIONS | | | | | |
|---|---|---|---|---|---|
| COMPT. | DOOR OPENING | INTERIOR | SHOE HEIGHT | DEPTH UPPER | DEPTH LOWER |
| L1 | 28"W x 56"H | 28.5"W x 67.5"H | 48" | TRANS | 22" |
| L2 | 76"W x 22"H | 81"W x 33.5"H | 14" | TRANS | 22" |
| L3 | 57"W x 16"H | 61"W x 23"H | – | 22" | 22" |
| L4 | 24"W x 48"H | 30.5"W x 54"H | 34" | 13" | 22" |
| R1 | 28"W x 56"H | 28.5"W x 67.5"H | 48" | TRANS | 22" |
| R2 | 76"W x 22"H | 81"W x 33.5"H | 14" | TRANS | 22" |
| R3 | 57"W x 16"H | 57"W x 22"H | – | 22" | 22" |
| R4 | 48"W x 48"H | 52"W x 54"H | – | 22" | 22" |
| PL1 | 45"W x 62"H | 50"W x 71.5"H | 19" | TRANS | 22" |
| PR1 | 45"W x 62"H | 50"W x 71.5"H | 19" | TRANS | 22" |
| SL1 | 22"W x 25"H | 24.5"W x 34.5"H | – | 22" | 22" |
| SR1 | 22"W x 25"H | 24.5"W x 34.5"H | – | 22" | 22" |

SHOP INSTRUCTIONS
- FOAM SYSTEM:
- FOAM CAPABLE DISCHARGES:
- **
- COMPARTMENT FINISH: LINE-X GRAY
- SHELVES/TRAYS FINISH:
-
-

| GROUND LADDERS & PIKE POLES | | | | |
|---|---|---|---|---|
| | ITEM | DESCRIPTION | MODEL # | QTY |
| | A | 33' 3 SEC EXTENSION | 1225-A | 1 |
| | B | 28' 2 SEC EXTENSION | 1200-A | 1 |
| | C | 24' 2 SEC EXTENSION | 900-A | 1 |
| | D | 18' ROOF | 675-A | 1 |
| | E | 16' ROOF | 675-A | 1 |
| | F | 14' FRESNO ATTIC | 701 | 1 |
| | G | 10' FOLDING ATTIC | 565-A | 1 |
| | H | 4' D-HANDLE PIKE POLE | FP40 | 2 |
| | I | 6' PIKE POLE | FP6 | 3 |
| | J | 8' PIKE POLE | FP8 | 2 |
| | K | 12' PIKE POLE | FP12 | 3 |
| BODY TOP | L | 17' LITTLE GIANT | 15187-662 | 1 |
| BASE | M | 14' ROOF | 775-A | 1 |
| FLY | N | 8' NY ROOF HOOK | RH-8 | 1 |

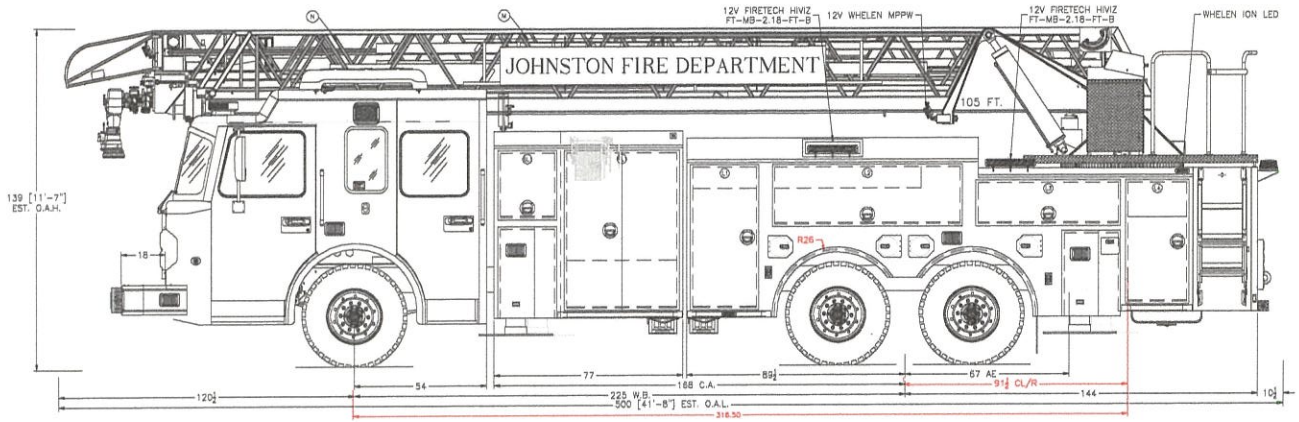


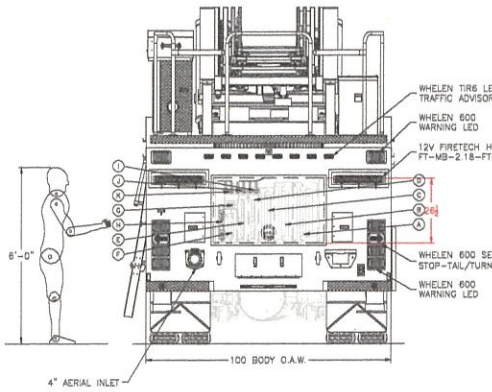


NOTE:

THIS DRAWING IS THE PROPERTY OF SPARTAN FIRE, LLC AND IS TO BE USED ONLY IN REFERENCE TO THE WORK PROPOSED OR CONTRACTED BY SPARTAN FIRE, LLC ANY REPRODUCTION IN PART OR IN WHOLE WITHOUT THE WRITTEN PERMISSION OF SPARTAN FIRE, LLC IS STRICTLY PROHIBITED.

DIMENSIONS SHOWN ARE APPROXIMATE AND ARE SUBJECT TO CHANGE AS MAY BE FOUND NECESSARY DURING CONSTRUCTION. THIS DRAWING MUST BE PLOTTED TO THE PAPER SIZE LISTED IN THE TITLE BLOCK FOR THE LISTED SCALE TO BE VALID.

THIS DRAWING IS FOR REFERENCE PURPOSES ONLY. SOME ITEMS MAY OR MAY NOT APPEAR ON THE DRAWING THAT MAY OR MAY NOT BE INCLUDED IN THE SPECIFICATIONS. THE SPECIFICATIONS SHALL BE THE FINAL AUTHORITY TO DETERMINE WHAT IS SUPPLIED ON THE APPARATUS.

REVISION HISTORY

| REV | INT. | DATE | DESCRIPTION |
|---|---|---|---|
| | | | |

**SHOP PRINT**
**PRE-CONSTRUCTION**

CHASSIS: SPARTAN GLADIATOR MFD 10" RAISED ROOF WITH 13" TRENCH & DROP CAB
ENGINE: CUMMINS X12 500HP WITH ALLISON 4000 EVS
PUMP: N/A
WATER TANK: N/A
BODY MATERIAL: 1/8" ALUMINUM
HOSE BED: N/A
GENERATOR: SMART POWER 6kW HR-8
COMPARTMENTS: 459 CUBIC FEET

SPARTAN ARFF GROUP
EMERGENCY RESPONSE

JOHNSTON FIRE DEPARTMENT
JOHNSTON, RI

MODEL: 105' REAR MOUNT AERIAL (S34RL-105)
DEALERSHIP: NEFEA
SCALE: 1/2" = 1'
DRAWN BY: KS
DATE: 5/18/22
SIZE: 24" X 36"
DRAWING NO: S5335
REV: 00
SHEET: 1 OF 1